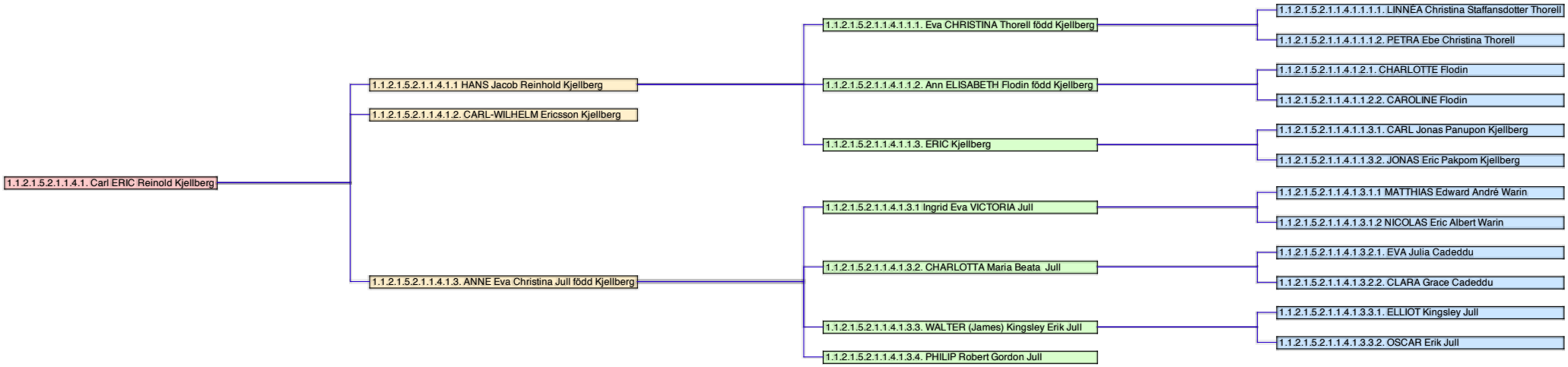1121521141 Carl ERIC Kjellberg generation 12-16